Assembly Instructions For

WB1388 (E) 4/08

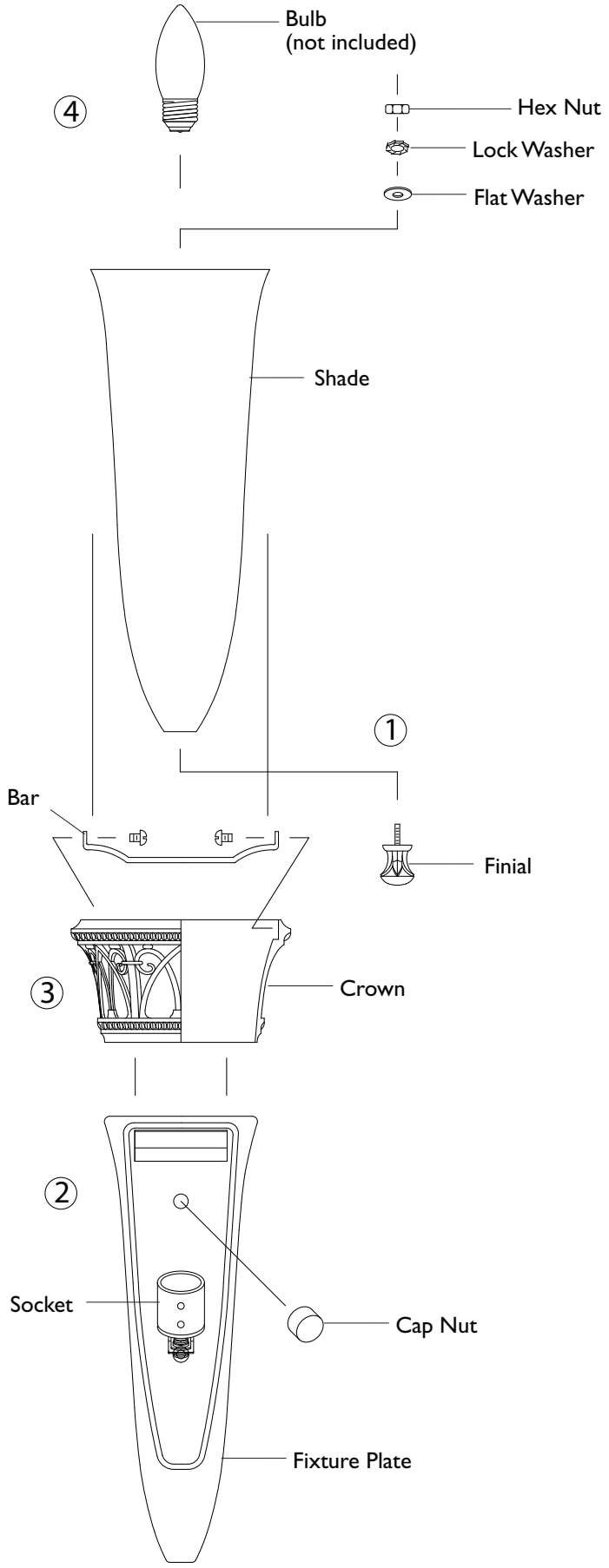

IMPORTANT
TURN OFF THE POWER AT THE MAIN FUSE OR CIRCUIT BREAKER BOX BEFORE STARTING INSTALLATION

Carefully unpack and identify all parts before assembly. Bulb not included.

1. Install finial onto bottom of shade by fastening with a flat washer, lock washer, and hex nut. IMPORTANT: DO NOT OVER TIGHTEN.
2. Follow enclosed supplement installation instructions for electrical and fixture installation onto house outlet box. If you do not have an outlet box at desired location to attach the fixture than hire a qualified electrician to create one.
3. A. Install bar into crown using two supplied short screws.
   B. Slip shade inside of crown until it sits securely.
   C. Install crown, along with shade, by carefully hooking onto fixture plate.
4. Install light bulb (not included). See relamping label at socket area for type and maximum allowed wattage.

MURRAY FEISS
Generation Brands™